# XE121 Evaluation Board Product Brief

XE121 Evaluation Board Product Brief

Proprietary and Confidential

Author: Acconeer

Version 1.0: 2022-07-06



Proprietary and Confidential
© 2022 by Acconeer – All rights reserved

# Table of Contents

1. Introduction ..... 4
2. XE121 Evaluation Board ..... 5
2.1 Overview ..... 5
2.2 Power ..... 9
2.3 Electrical Schematics ..... 10
2.4 Bill of Material ..... 16
2.5 Pinning ..... 17
3. Revision History ..... 19
4. Disclaimer ..... 20



Proprietary and Confidential
© 2022 by Acconeer – All rights reserved

# 1. Introduction

The A121 EVK is an evaluation kit designed to evaluate the Acconeer A121 pulsed coherent radar sensor. The kit consists of three boards: the XC120, XE121 and XS121. The XC120 board carries a cortex M7 MCU which is to be flashed with a software dedicated to stream data from the A121 radar sensor to Acconeer's "Exploration Tool" via USB HS 2.0[1]. The XC120 is intended to be used with the exploration server for streaming radar sensor data only and after flashing, no further configuration by the user is expected. The XE121 features an on board A121 pulsed coherent radar sensor and the possibility to add up to four additional A121 radar sensors via FFC (Flat Flexible Cable) to the XS121 radar satellite boards. This document focuses on the XE121 board. For details on XC120 and XS121 refer to the respective product briefs. For details on how to use the XC120, XE121 and XS121, refer to the A121 EVK Hardware User Guide available on the Acconeer Developer page: https://developer.acconeer.com/

Below a system overview is shown:

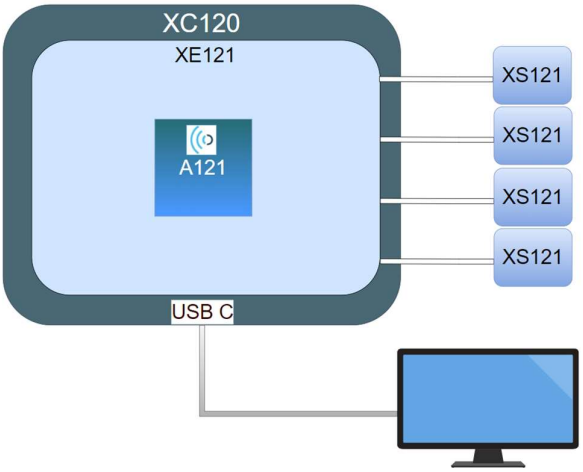


[1] Acconeer's "Exploration Tool" is supported by Linux and Windows OS.



Proprietary and Confidential
© 2022 by Acconeer – All rights reserved

# 2. XE121 Evaluation Board.

## 2.1 Overview

The XE121 Evaluation Board is part of the Acconeer A121 Evaluation Kit and is intended to be used together with the XC120, a Raspberry Pi or STM Nucleo-64 or STM Nucleo-144 development boards. XE121 is equipped with 1 fixed A121 pulsed coherent radar sensor as well as 4 FFC (Flat Flexible Cable) connectors to which XS121 satellite boards can be connected. The flex cable solution enables a wide variety of use cases involving multiple radar sensors. It also facilitates proof of concepts since the radar sensor board placement is not limited by the size of the evaluation board. It is not possible to run the XE121 without one of these "MCU boards" since the XE121 is not equipped with an MCU for control and communication of the A121 pulsed coherent radar sensor.

The purpose of the XE121 is to be able to evaluate the A121 pulsed coherent radar sensor. This can be done in three different ways:

The most straight-forward and optimized way to evaluate the A121 radar sensor is to connect the XE121 to the XC120 Connector board which enables evaluation of the radar sensor using the Acconeer "Exploration Tool"[2]. Connecting the XE121 to the XC120 gives you the highest data streaming rate thanks to the USB HS 2.0 connection on the XC120 and the high SPI speed that is possible to achieve when using the XC120 in combination with XE121.

If you prefer, you can connect the XE121 to a Raspberry Pi, using the "Software Development Kit for Raspberry Pi". The rate at which you can retrieve data from the A121 is in this case limited by the Raspberry Pi SPI interface speed.

Another option is to connect XE121 directly to an STM Nucleo-64 or Nucleo-144 development board featuring the MCU of your choice. The main reason for making XE121 compatible with the STM Nucleo development boards is to facilitate SW development, there is no support for this configuration in Acconeer "Exploration Tool". Acconeer provides a SW integration guideline "STM32CubeIDE User Guide" to help you get started. Refer to the Acconeer Developer page for the different SW guides and downloads: https://developer.acconeer.com/

The XE121 is compatible with the Acconeer LH120 lens kit.

In Picture 1 the block diagram of XE121 is shown:

[2] Available for download on github: https://github.com/acconeer/acconeer-python-exploration



Proprietary and Confidential
© 2022 by Acconeer – All rights reserved

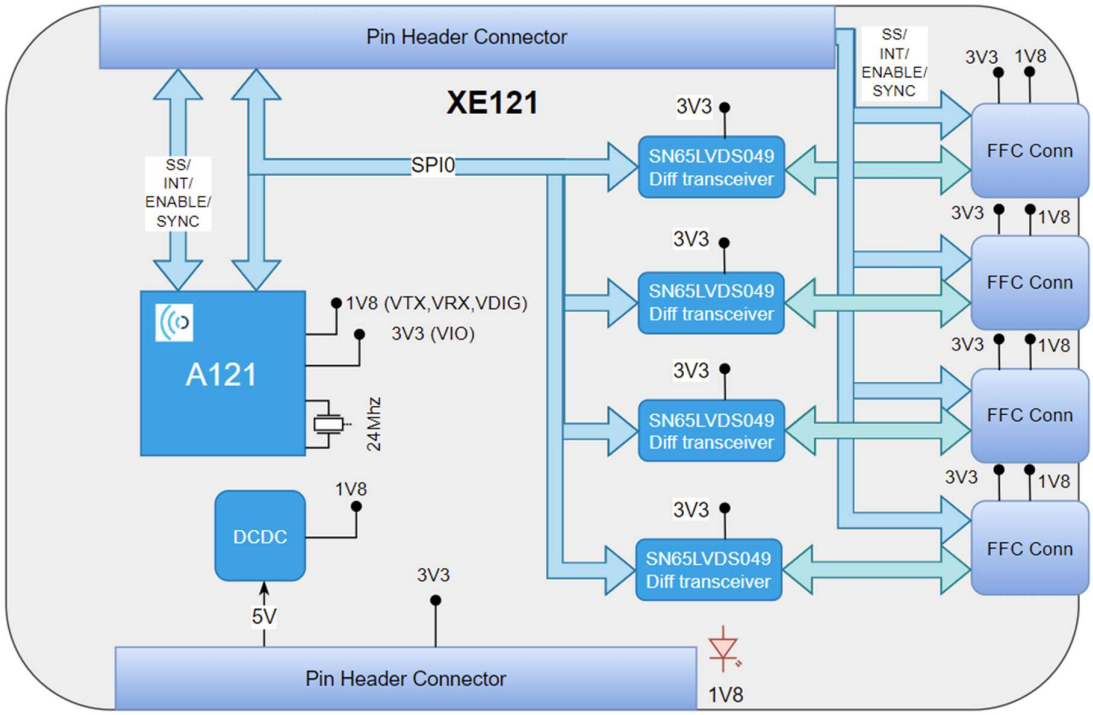


**Picture 1. The blockdiagram of XE121.**

In the pictures below, the XE121 is shown as well as how to connect it to XC120, XS121, Raspberry Pi and STM Nucleo development boards.



Proprietary and Confidential
© 2022 by Acconeer – All rights reserved

**Picture 2. XE121, front side.**

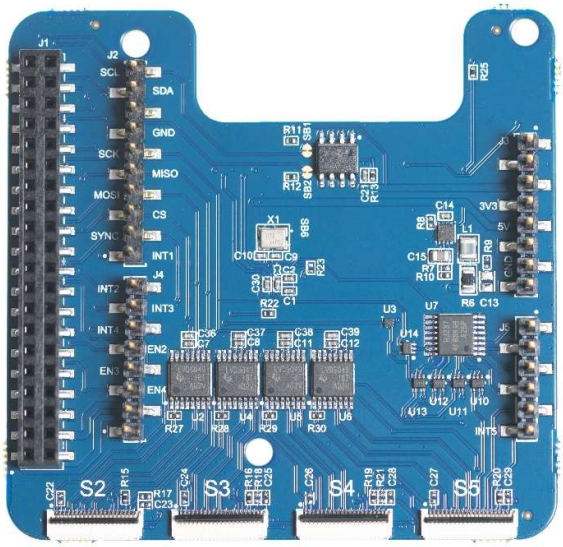


**Picture 3. XE121 reverse side.**



Proprietary and Confidential
© 2022 by Acconeer – All rights reserved

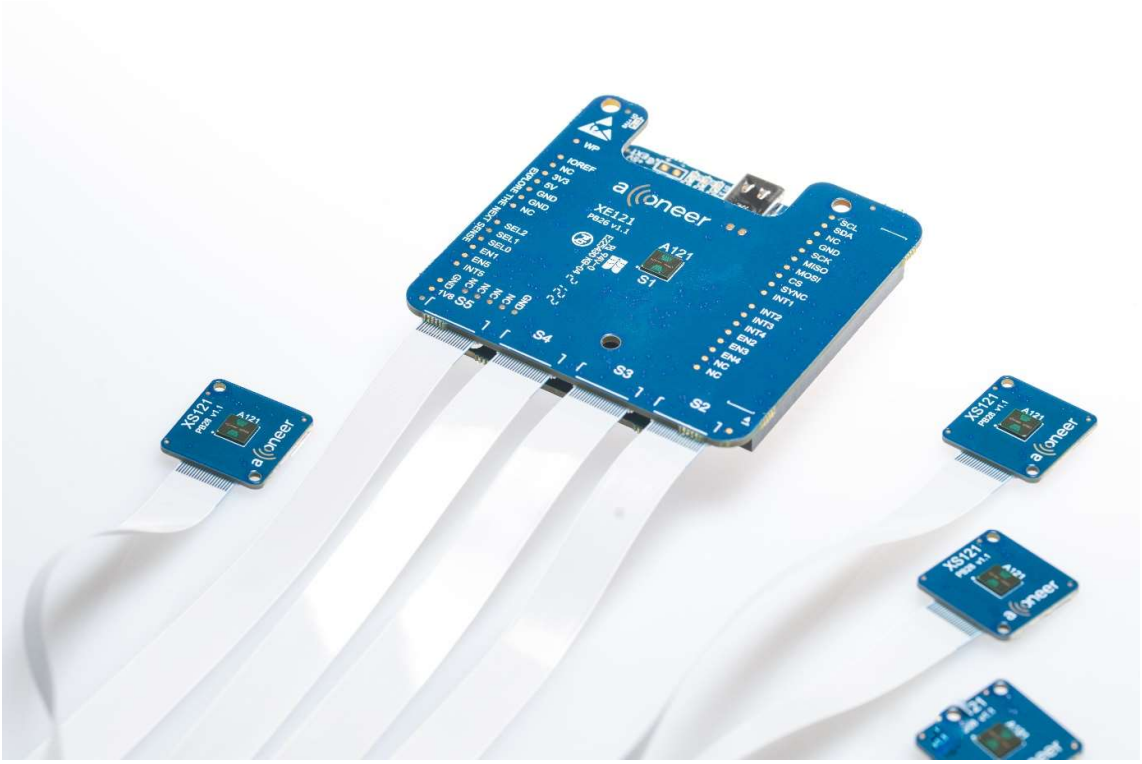


**Picture 4. XE121 connected to XC120 and four XS121.**

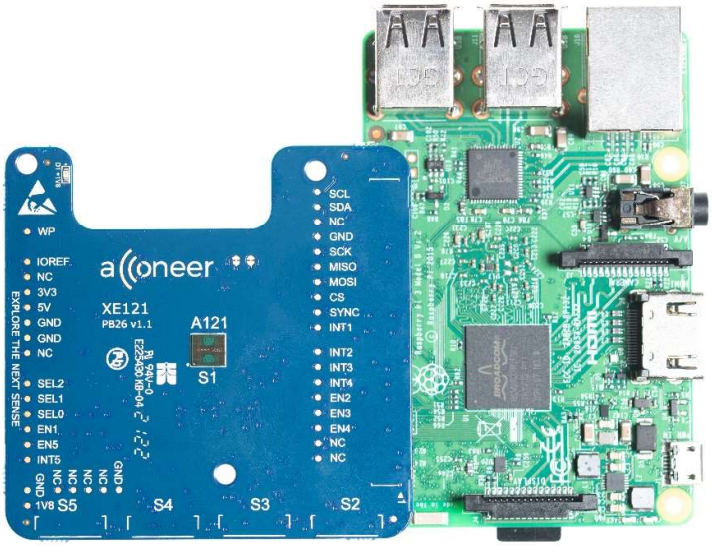


**Picture 5. XE121 connected to Raspberry Pi.**



Proprietary and Confidential
© 2022 by Acconeer – All rights reserved

**Picture 6. XE121 connected to an STM Nucleo Development Board.**

## 2.2 Power

The XE121 evaluation board is powered from either XC120, Nucleo Development board or Raspberry Pi. There is a power regulator on the XE121 that generates the 1.8V needed for the A121 radar sensor. When the power LED D1 is lit, the board is powered on and ready for use. Depending on your use case, if you connect more than 1 XS121 to your XE121 and run simultaneous radar measurements on them, the power delivered from XC120 powered via USB connector (or Nucleo and Raspberry Pi powered via USB connector) may not be enough. In this case an external power supply is needed. The XC120 has such an option. Refer to XC120 Product Brief fore details: https://developer.acconeer.com/

For details how to use the Nucleo development board and the Raspberry Pi with external power supply, refer to official product information.

https://www.st.com/content/st_com/en.html

https://www.raspberrypi.com/documentation/computers/raspberry-pi.html - power-supply



Proprietary and Confidential
© 2022 by Acconeer – All rights reserved

## 2.3 Electrical Schematics

On the following pages, please find the electrical schematics for the XE121:



Proprietary and Confidential
© 2018 by Acconeer – All rights reserved

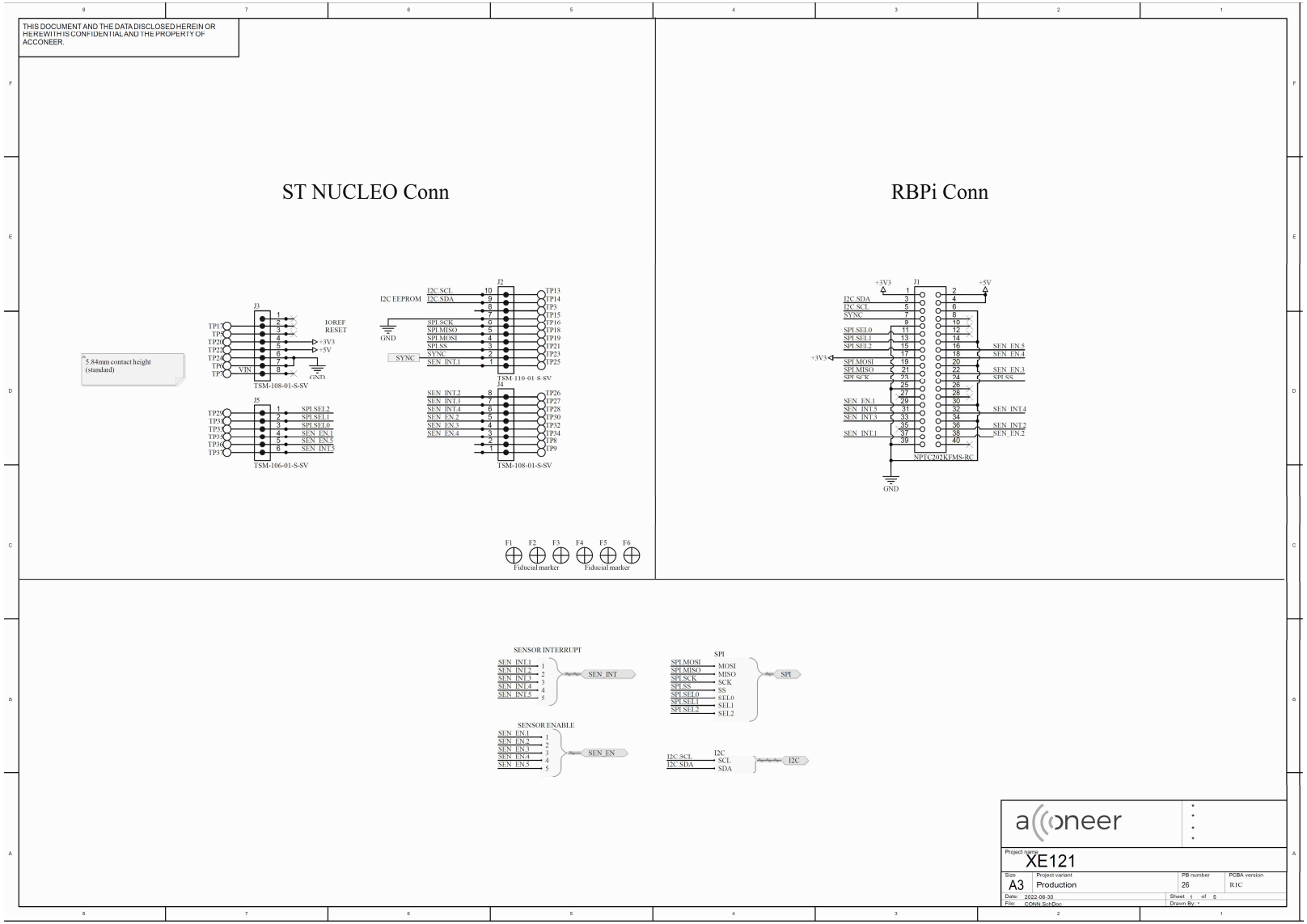






Proprietary and Confidential
© 2022 by Acconeer – All rights reserved

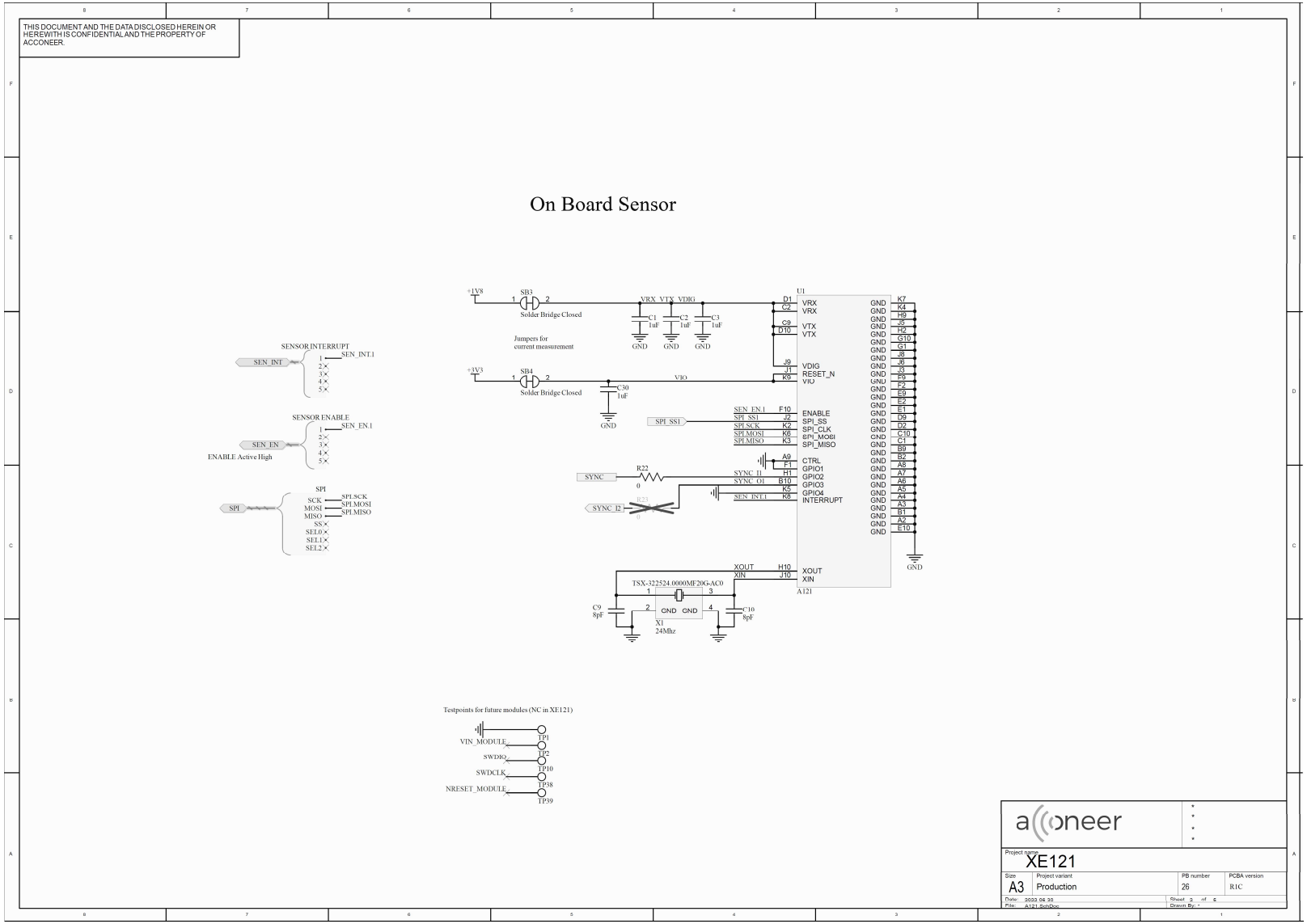




Proprietary and Confidential
© 2022 by Acconeer – All rights reserved

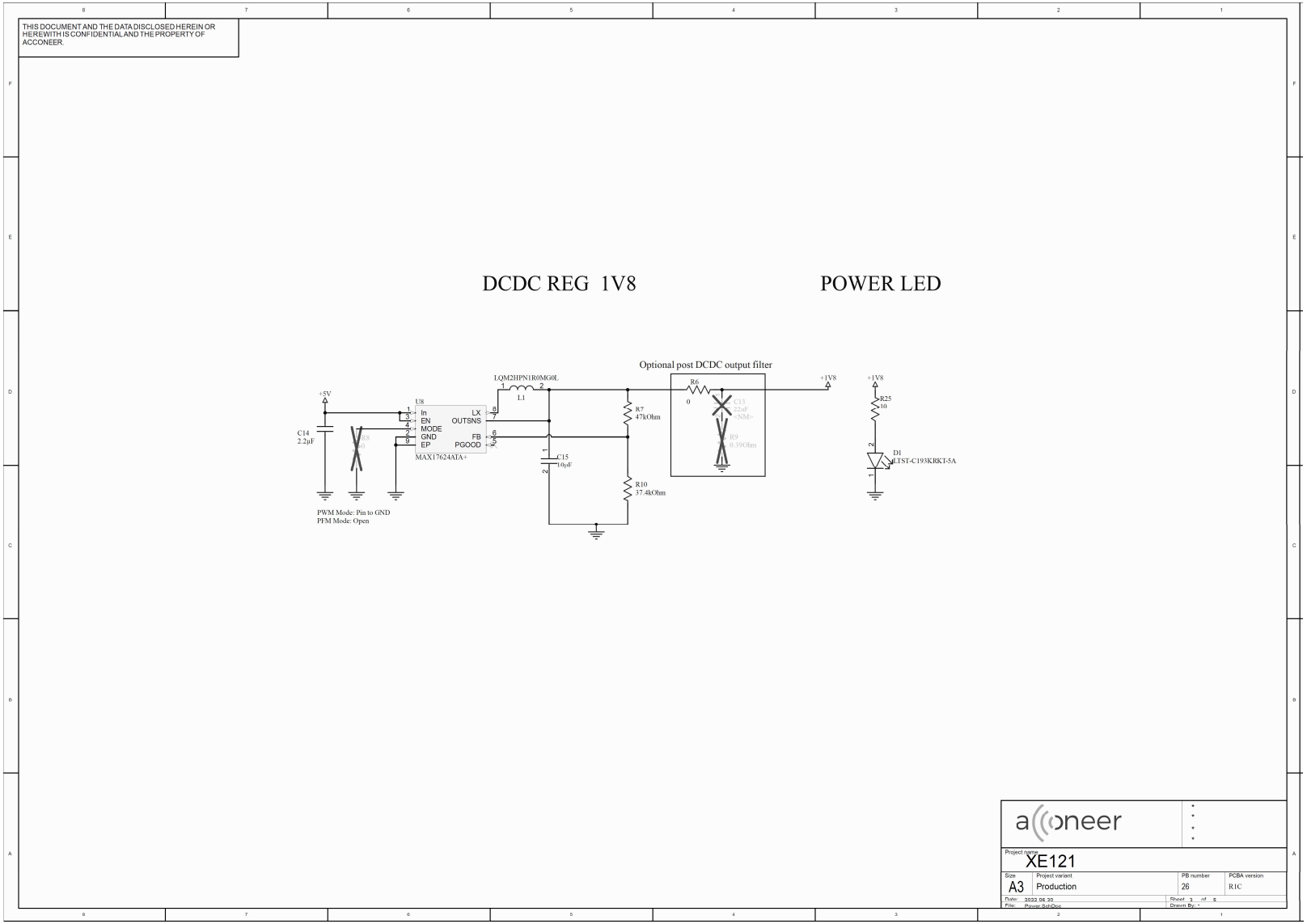






Proprietary and Confidential
© 2022 by Acconeer – All rights reserved

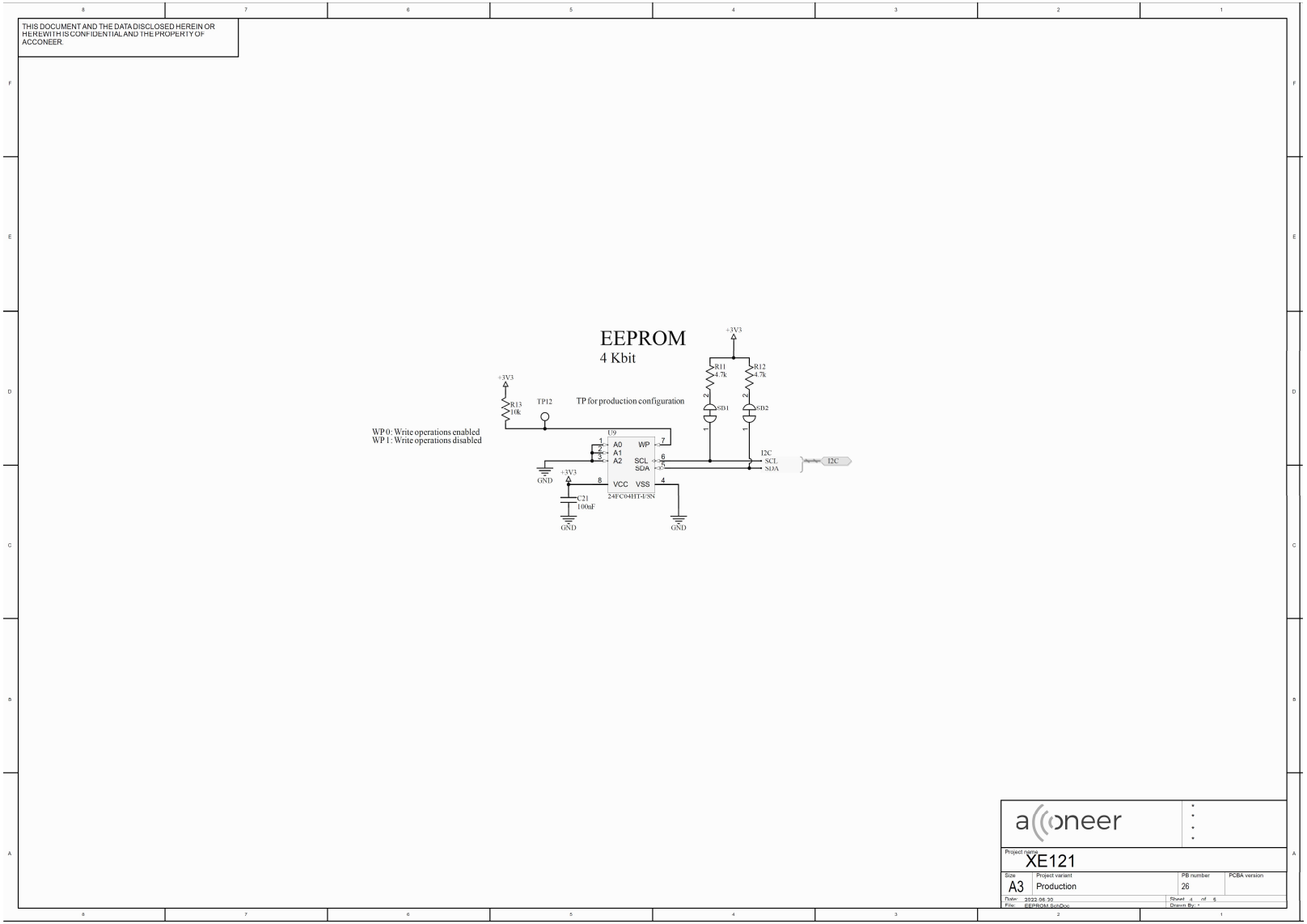




Proprietary and Confidential
© 2022 by Acconeer – All rights reserved

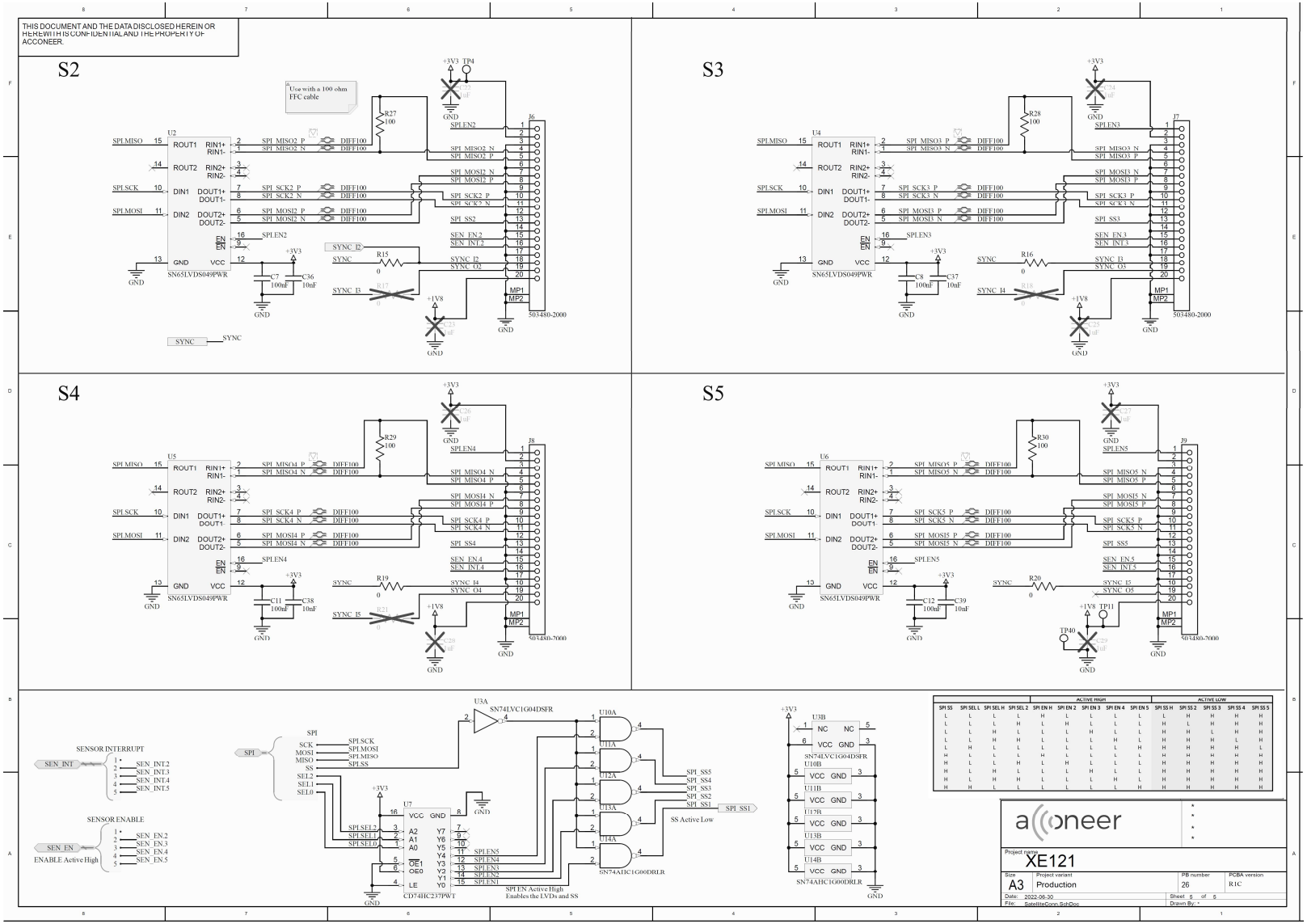






Proprietary and Confidential
© 2022 by Acconeer – All rights reserved

## 2.4 Bill of Material

Table 1 shows the BOM for the XE121

**Table 1. The BOM for XE121**

| Designator | Name | Qty | Value | Voltage rating | Tolerance | Manufacturer |
|---|---|---|---|---|---|---|
| C1, C2, C3, C30 | Capacitor 1uF, metric 1005 | 4 | 1uF | 10V | 10% | |
| C7, C8, C11, C12, C21 | Capacitor 100nF, metric 1005 | 5 | 100nF | 10V | 10% | |
| C9, C10 | Capacitor 8 pF, metric 1005 | 2 | 8pF | 10V | 1% | |
| C14 | Capacitor 2.2uF, metric 1005 | 1 | 2.2µF | 10V | 10% | |
| C15 | Capacitor 10uF, metric 2012 | 1 | 10µF | 10V | 10% | |
| C36, C37, C38, C39 | Capacitor 10nF, metric 1005 | 4 | 10nF | 10V | 10% | |
| D1 | LTST-C193KRKT-5A | 1 | | | | Vishay Lite-on |
| J1 | NPTC202KFMS-RC | 1 | | | | Sullins |
| J2 | TSM-110-01-S-SV | 1 | | | | Samtec |
| J3, J4 | TSM-108-01-S-SV | 2 | | | | Samtec |
| J5 | TSM-106-01-S-SV | 1 | | | | Samtec |
| J6, J7, J8, J9 | 503480-2000 | 4 | | | | Molex |
| L1 | LQM2HPN1R0MG0L | 1 | | | | Murata |
| R6 | Resistor 0 Ohm, metric 2012 | 1 | 0 Ohm | | 1% | |
| R7 | Resistor 47 kOhm, metric 1005 | 1 | 47kOhm | | 1% | |
| R15, R16, R19, R20, R22 | Resistor 0 Ohm, metric 1005 | 5 | 0 | | 1% | |
| R10 | Resistor 37.4 kOhm, metric 1005 | 1 | 37.4kOhm | | 1% | |
| R11, R12 | Resistor 4.7 kOhm, metric 1005 | 2 | 4.7k | | 1% | |
| R13 | Resistor 10 kOhm, metric 1005 | 1 | 10k | | 1% | |
| R25 | Resistor 10 Ohm, metric 1005 | 1 | 10 | | 1% | |
| R27, R28, R29, R30 | Resistor 100 Ohm, metric 1005 | 4 | 100 | | 1% | |
| U1 | A121 | 1 | | | | Acconeer |
| U2, U4, U5, U6 | SN65LVDS049PWR | 4 | | | | TI |
| U3 | SN74LVC1G04DSFR | 1 | | | | TI |
| U7 | CD74HC237PWT | 1 | | | | TI |
| U8 | MAX17624ATA+ | 1 | | | | Maxim |
| U9 | 24FC04HT-I/SN | 1 | | | | Microchip |
| U10, U11, U12, U13, U14 | SN74AHC1G00DRLR | 5 | | | | TI |
| X1 | TSX-322524.0000MF20G-AC0 | 1 | | | | Epson |



Proprietary and Confidential
© 2022 by Acconeer – All rights reserved

## 2.5 Pinning

Table 2 shows the pinout of XE121 connectors to XC120 and ST Nucleo development boards:

**Table 2. Pinout of XE121 connectors to XC120 and ST Nucleo development boards.**

| Pin | XC120 (J6) | XE121 (J2) | ST Nucleo | Description |
|---|---|---|---|---|
| 10 | I2C1.SCL | I2C.SCL | D15 | Used for EEPROM on the XE121 |
| 9 | I2C1.SDA | I2C.SDA | D14 | Used for EEPROM on the XE121 |
| 8 | NC | NC | AVDD | |
| 7 | GND | GND | GND | |
| 6 | SPI3.SCK | SPI.SCK.CON | D13 | SPI interface for communication with sensor on XE121 and XS121 |
| 5 | SPI3.MISO | SPI.MISO.CON | D12 | SPI interface for communication with sensor on XE121 and XS121 |
| 4 | SPI3.MOSI | SPI.MOSI.CON | D11 | SPI interface for communication with sensor on XE121 and XS121 |
| 3 | SPI3.SS | SPI.SS | D10 | SPI interface for communication with sensor on XE121 and XS121 |
| 2 | SYNC | SYNC | D9 | Signal for sensor synchronization |
| 1 | SEN_INT.1 | SEN_INT.1 | D8 | XE121 sensor Interrupt signal |
| **Pin** | **XC120 (J7)** | **XE121(J4)** | **ST Nucleo** | **Description** |
| 8 | SEN_INT.2 | SEN_INT.2 | D7 | XS121 sensor interrupt signal |
| 7 | SEN_INT.3 | SEN_INT.3 | D6 | XS121 sensor interrupt signal |
| 6 | SEN_INT.4 | SEN_INT.4 | D5 | XS121 sensor interrupt signal |
| 5 | SEN_EN.2 | SEN_EN.2 | D4 | XS121 sensor enable signal |
| 4 | SEN_EN.3 | SEN_EN.3 | D3 | XS121 sensor enable signal |
| 3 | SEN_EN.4 | SEN_EN.4 | D2 | XS121 sensor enable signal |
| 2 | UART4_TX | NC | D1 | Not used on XE121 |
| 1 | UART4_RX | NC | D0 | Not used on XE121 |
| **Pin** | **XC120 (J8)** | **XE121(J3)** | **ST Nucleo** | **Description** |
| 1 | NC | NC | NC | Not used on XE121 |
| 2 | +3V3 | NC | IOREF | Not used on XE121 |
| 3 | PE3 | NC | RESET | Not used on XE121 |
| 4 | +3V3 | +3V3 | +3V3 | |
| 5 | +5V | +5V | +5V | |
| 6 | GND | GND | GND | |
| 7 | GND | GND | GND | |
| 8 | VIN | NC | VIN | Not used on XE121 |
| **Pin** | **XC120 (J9)** | **XE121(J5)** | **ST Nucleo** | **Description** |
| 1 | SPI3.SEL2/UART4 CTS | SPI.SEL2 | A0 | SPI selection for LVDS enable and SPI SS |
| 2 | SPI3.SEL1/UART4 RTS | SPI.SEL1 | A1 | SPI selection for LVDS enable and SPI SS |
| 3 | SPI3.SEL0 | SPI.SEL0 | A2 | SPI selection for LVDS enable and SPI SS |
| 4 | SEN_EN.1/DUART6 TX | SEN_EN.1 | A3 | XE121 sensor enable signal |
| 5 | SEN_EN.5/DUART6 RX | SEN_EN.5 | A4 | XS121 sensor enable signal |
| 6 | SEN_INT.5 | SEN_INT.5 | A5 | XS121 sensor interrupt signal |

Table 3 shows the pinout of XE121 connector to Raspberry Pi:





Proprietary and Confidential
© 2022 by Acconeer – All rights reserved

**Table 3. The pinout of XE121 connector to Raspberry Pi.**

| Pin | XE121 | Raspberry Pi | Description |
|---|---|---|---|
| 1 | +3V3 | 3V3 | |
| 2 | +5V | 5V Power | |
| 3 | I2C.SDA | GPIO 2 (I2C1 SDA) | Used for EEPROM on the XE121 |
| 4 | +5V | 5V Power | |
| 5 | I2C.SCL | GPIO 3 (I2C1 SCL) | Used for EEPROM on the XE121 |
| 6 | GND | GND | |
| 7 | SYNC | GPIO 4 (GPCLK0) | Signal for sensor synchronization |
| 8 | NC | GPIO 14 (UART TX) | Not used on XE121 |
| 9 | GND | GND | |
| 10 | NC | GPIO 15 (UART RX) | Not used on XE121 |
| 11 | SPI.SEL0 | GPIO 17 | SPI selection for LVDS enable and SPI SS |
| 12 | NC | GPIO 18 (PCM CLK) | Not used on XE121 |
| 13 | SPI.SEL1 | GPIO 27 | SPI selection for LVDS enable and SPI SS |
| 14 | GND | GND | |
| 15 | SPI.SEL2 | GPIO 22 | SPI selection for LVDS enable and SPI SS |
| 16 | SEN_EN.5 | GPIO23 | XS121 sensor enable signal |
| 17 | +3V3 | +3V3 | |
| 18 | SEN_EN.4 | GPIO 24 | XS121 sensor enable signal |
| 19 | SPI.MOSI.CON | GPIO 10 (SPI0 MOSI) | SPI interface for communication with sensor on XE121 and XS121 |
| 20 | GND | GND | |
| 21 | SPI.MISO.CON | GPIO 9 (SPI0 MISO) | SPI interface for communication with sensor on XE121 and XS121 |
| 22 | SEN_EN.3 | GPIO 25 | XS121 sensor enable signal |
| 23 | SPI.SCK.CON | GPIO 11 (SPI0 SCK) | SPI interface for communication with sensor on XE121 and XS121 |
| 24 | SPI.SS | GPIO 8 (SPI0 CE0) | SPI interface for communication with sensor on XE121 and XS121 |
| 25 | GND | GND | |
| 26 | NC | GPIO 7 (SPIO0 CE1) | Not used on XE121 |
| 27 | NC | GPIO 0 (EEPROM SDA) | Not used on XE121 |
| 28 | NC | GPIO1 (EEPROM SCL) | Not used on XE121 |
| 29 | SEN_EN.1 | GPIO 5 | XE121 sensor enable signal |
| 30 | GND | GND | |
| 31 | SEN_INT.5 | GPIO 6 | XS121 sensor interrupt signal |
| 32 | SEN_INT.4 | GPIO 12 (PWM0) | XS121 sensor interrupt signal |
| 33 | SEN_INT.3 | GPIO 13 (PWM1) | XS121 sensor interrupt signal |
| 34 | GND | GND | |
| 35 | NC | GPIO 19 (PCM FS) | Not used on XE121 |
| 36 | SEN_INT.2 | GPIO 16 | XS121 sensor interrupt signal |
| 37 | SEN_INT.1 | GPIO 26 | XE121 sensor Interrupt signal |
| 38 | SEN_EN.2 | GPIO 20 (PCM DIN) | XS121 sensor enable signal |
| 39 | GND | GND | |
| 40 | NC | GPIO 21 (PCM DOUT) | Not used on XE121 |



Proprietary and Confidential
© 2022 by Acconeer – All rights reserved

# 3. Revision History

| Date | Version | Changes |
|---|---|---|
| 2022-07-06 | 1.0 | Original Version |
| | | |
| | | |



Proprietary and Confidential
© 2022 by Acconeer – All rights reserved

# 4. Disclaimer

The information herein is believed to be correct as of the date issued. Acconeer AB ("**Acconeer**") will not be responsible for damages of any nature resulting from the use or reliance upon the information contained herein. Acconeer makes no warranties, expressed or implied, of merchantability or fitness for a particular purpose or course of performance or usage of trade. Therefore, it is the user's responsibility to thoroughly test the product in their particular application to determine its performance, efficacy and safety. Users should obtain the latest relevant information before placing orders.

Unless Acconeer has explicitly designated an individual Acconeer product as meeting the requirement of a particular industry standard, Acconeer is not responsible for any failure to meet such industry standard requirements.

Unless explicitly stated herein this document Acconeer has not performed any regulatory conformity test. It is the user's responsibility to assure that necessary regulatory conditions are met and approvals have been obtained when using the product. Regardless of whether the product has passed any conformity test, this document does not constitute any regulatory approval of the user's product or application using Acconeer's product.

Nothing contained herein is to be considered as permission or a recommendation to infringe any patent or any other intellectual property right. No license, express or implied, to any intellectual property right is granted by Acconeer herein.

Acconeer reserves the right to at any time correct, change, amend, enhance, modify, and improve this document and/or Acconeer products without notice.

This document supersedes and replaces all information supplied prior to the publication hereof.



Proprietary and Confidential
© 2022 by Acconeer – All rights reserved